TREND WINDOWS & DOORS	TIMBER BIFOLD WINDOW 10 - BUILD IN DETAILS			TITLE: VERTICAL CROSS SECTION	
				DOC #: BID TIMBER BIFOLD WINDOW	PAGE: 10.06
	DRAWN: PK	APPROVED: CA	RELEASE DATE 07/06/2024	RELEASE DESCRIPTION REL. FOR PRODUCTION	ISSUE: OR

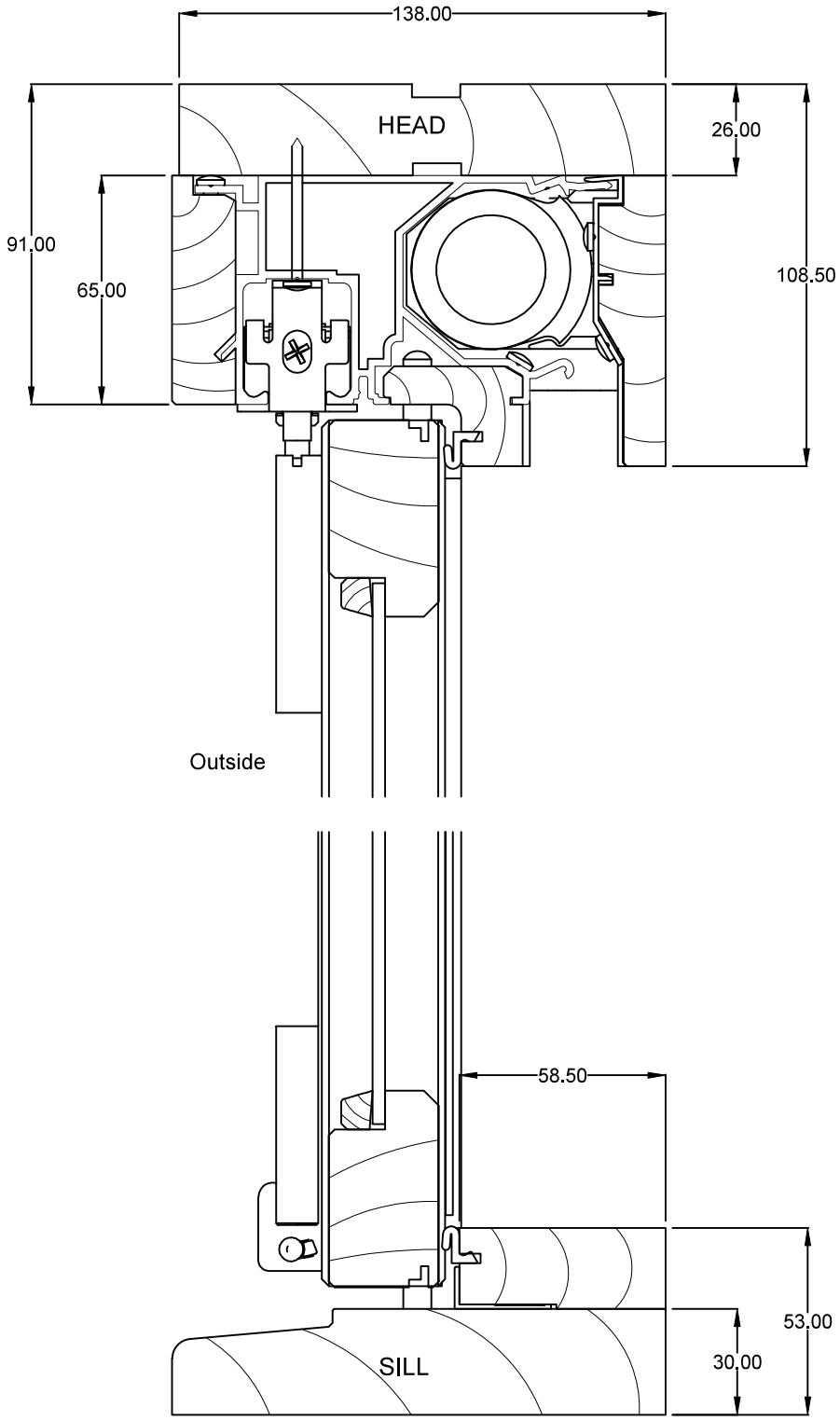

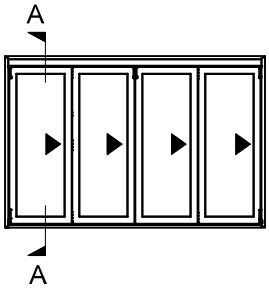

Applicable for Cedar Windows. Sizes may differ for Meranti Windows.

G:\R&D\PRODUCT DESIGN\03_TIMBER\10 - BUILD IN DETAILS\TREND\BID TIMBER BIFOLD WINDOW.DWG

THIS DRAWING AND/OR CATALOGUE IS THE SUBJECT OF COPYRIGHT AND MAY NOT BE REPRODUCED, COPIED OR LOANED IN ANY FORM WITHOUT THE WRITTEN PERMISSION OF TREND WHOSE PROPERTY IT IS AND TO WHOM IT MUST BE RETURNED ON REQUEST.

TREND WINDOWS & DOORS	TIMBER BIFOLD WINDOW 10 - BUILD IN DETAILS			TITLE: HORIZONTAL CROSS SECTION	
				DOC #: BID TIMBER BIFOLD WINDOW	PAGE: 10.07
	DRAWN: PK	APPROVED: CA	RELEASE DATE 07/06/2024	RELEASE DESCRIPTION REL. FOR PRODUCTION	ISSUE: OR

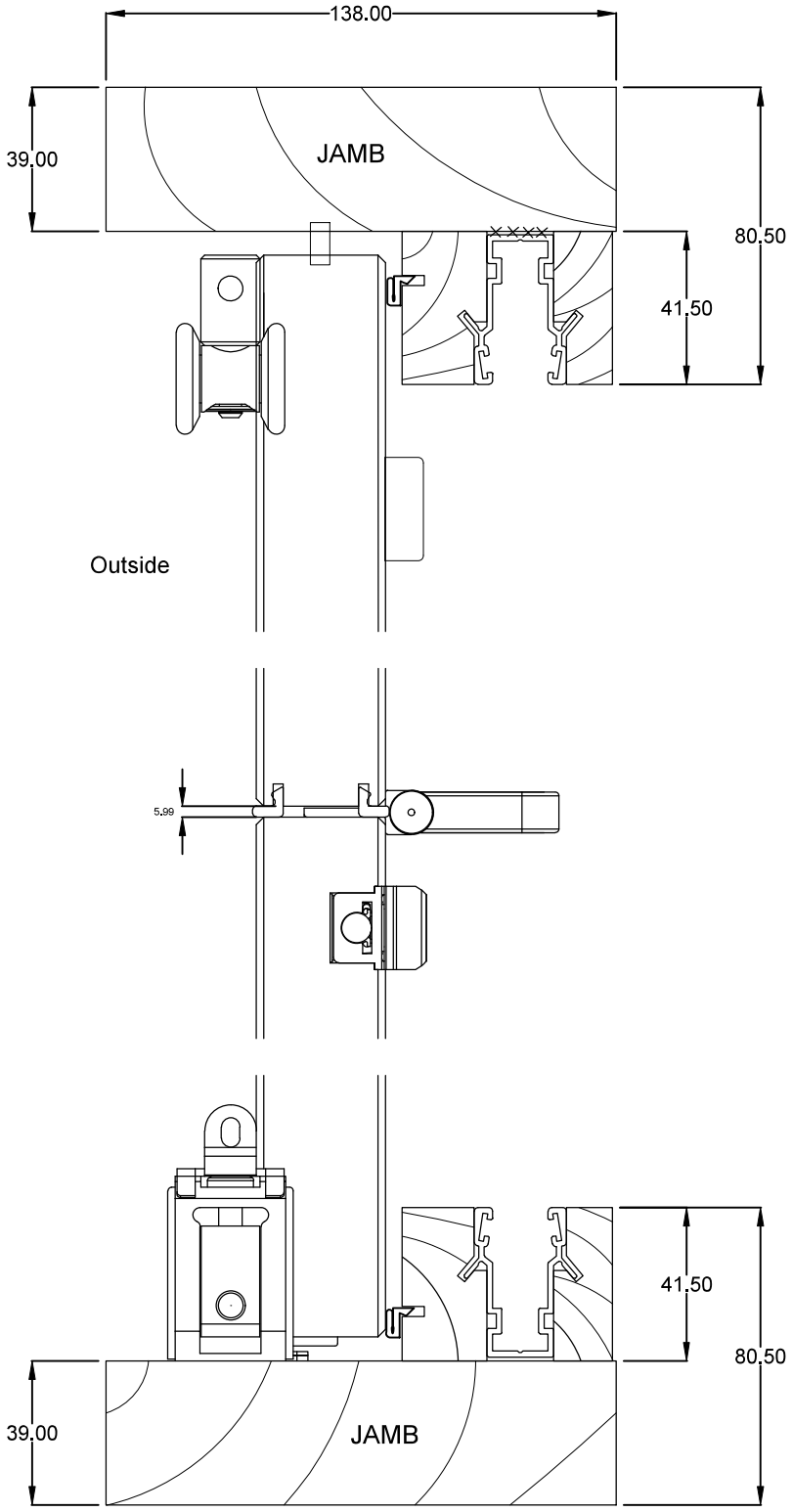

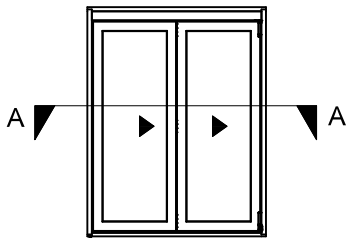

Applicable for Cedar Windows. Sizes may differ for Meranti Windows.

G:\R&D\PRODUCT DESIGN\03_TIMBER\10 - BUILD IN DETAILS\TREND\BID TIMBER BIFOLD WINDOW.DWG

THIS DRAWING AND/OR CATALOGUE IS THE SUBJECT OF COPYRIGHT AND MAY NOT BE REPRODUCED, COPIED OR LOANED IN ANY FORM WITHOUT THE WRITTEN PERMISSION OF TREND WHOSE PROPERTY IT IS AND TO WHOM IT MUST BE RETURNED ON REQUEST.